NEWHAVEN DISPLAY
INTERNATIONAL

Product Specification

NHD-240128WG-BTFH-VZ#

Graphic Liquid Crystal Display Module

NHD-	Newhaven Display
240128-	240 x 128 Pixels
WG-	Display Type: Graphic
B-	Model
T-	White LED Backlight
F-	FSTN (+)
H-	Transflective, 6:00 Optimal View, Wide Temperature
VZ#-	Built-in Negative Voltage

Newhaven Display International, Inc.
2661 Galvin Court, Elgin, IL 60124 USA

Ph: 847.844.8795 | Fx: 847.844.8796
www.newhavendisplay.com

REACH Compliant

RoHS Compliant

Table of Contents

Document Revision History 2
Mechanical Drawing 3
Pin Description 4
Wiring Diagram 4
Electrical Characteristics 5
Optical Characteristics 5
Controller Information 5
Table of Commands 6
Built-in Font Table 7
Timing Characteristics 8
Example Program Code 9
Quality Information 10

Additional Resources

- **Support Forum:** https://support.newhavendisplay.com/hc/en-us/community/topics
- **GitHub:** https://github.com/newhavendisplay
- **Example Code:** https://support.newhavendisplay.com/hc/en-us/categories/4409527834135-Example-Code/
- **Knowledge Center:** https://www.newhavendisplay.com/knowledge_center.html
- **Quality Center:** https://www.newhavendisplay.com/quality_center.html
- **Precautions for using LCDs/LCMs:** https://www.newhavendisplay.com/specs/precautions.pdf
- **Warranty / Terms & Conditions:** https://www.newhavendisplay.com/terms.html

Document Revision History

Revision	Date	Description	Changed By
0	03/03/2008	Initial Release	-
1	04/26/2010	User Guide Reformat	BE
2	03/03/2011	Electrical Characteristics Updated	AK
3	04/29/2011	Pin Description Updated	AK
4	05/14/2014	Electrical Characteristics, Mechanical Drawing Updated	ML
5	10/11/2016	Mechanical Drawing, Electrical & Optical Char. Updated	SB
6	01/08/2019	Backlight Cable Length & Backlight Characteristics Updated	SB
7	06/23/2020	Updated Logic Voltages, Quality Information	AS
8	05/17/2021	Electrical, Optical & IC Updated	ZP
9	08/16/2021	2D Mechanical Drawing Updated	ZP
10	04/25/2023	Updated Backlight Driven Condition in Electrical Characteristics	KL
11	08/29/2023	Mechanical Drawing Updated	KL
12	05/29/2024	Part Revision Upgraded to Rev2A	KL
13	07/15/2024	Mechanical Drawing Updated	KL
14	08/28/2024	Backlight Updated to Current Driven	KL
15	09/23/2024	Min/Max Backlight Voltages Updated	KL

Mechanical Drawing

Newhaven Display
NHD-240128WG-BTFH-VZ#_Rev2A
Date Code

Part Label (type/format may vary)

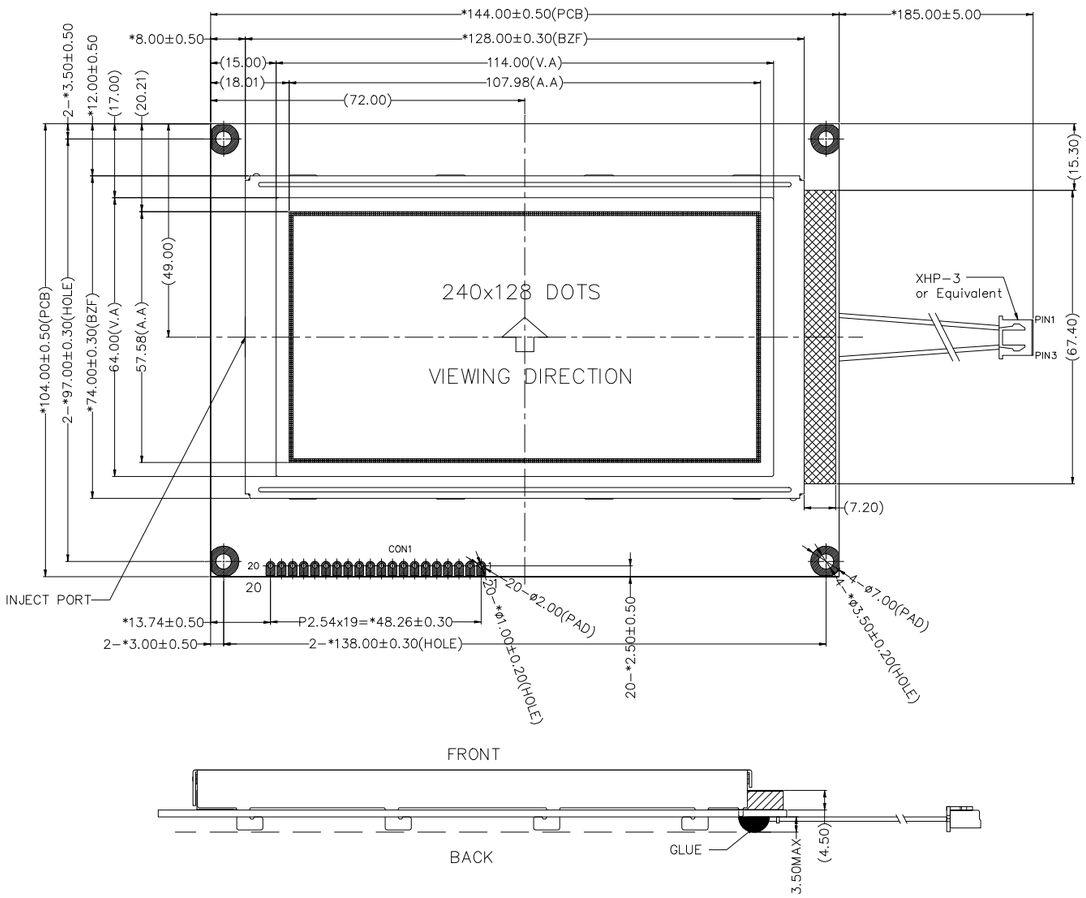

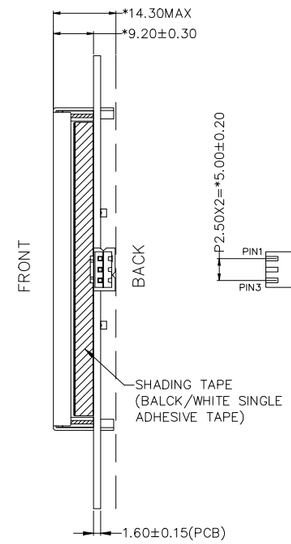

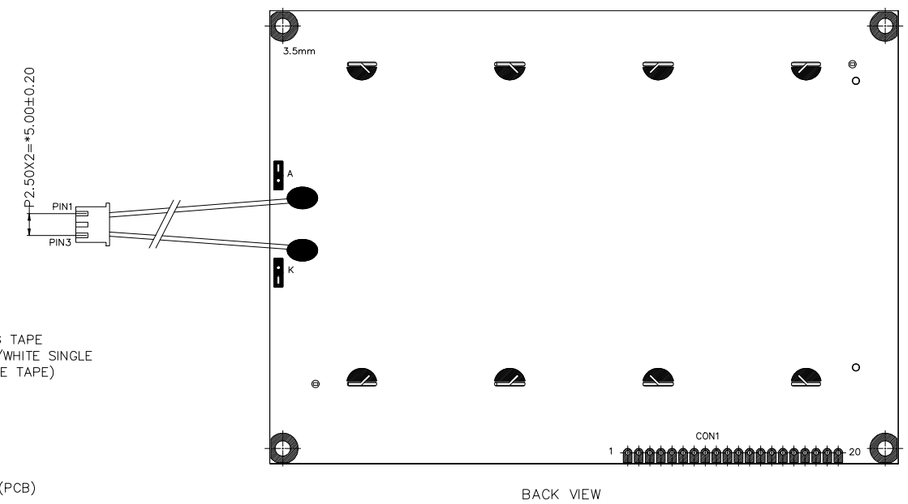

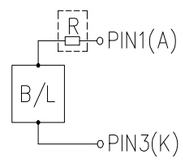

BACKLIGHT DRIVER CIRCUIT DIAGRAM

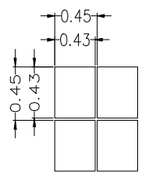

DOT SIZE
SCALE: 20/1

PIN	1	2	3	4	5	6	7	8	9	10
CONNECTOR	Vss	Vdd	Vo	C/D	$\overline{RD}$	$\overline{WR}$	DB0	DB1	DB2	DB3
PIN	11	12	13	14	15	16	17	18	19	20
CONNECTOR	DB4	DB5	DB6	DB7	$\overline{CE}$	$\overline{RESET}$	Vee	MD2	FS1	NC

Product Description: 240x128 Graphic LCD

1. Driver IC: RA6963N1
2. Driving Mode: 1/128 Duty, 1/12 Bias
3. Interface: 8-bit 8080 Parallel
4. Power Requirement: 5.0V LCD
5. Optical Features: FSTN (+), Transflective, 6:00 View, White Backlight
6. Recommended Pin Header: 20pin 2.54mm pitch

Standard Tolerance:
(Unless otherwise specified)
Linear: ±0.3mm

NEWHAVEN DISPLAY INTERNATIONAL

Drawing/Part Number: NHD-240128WG-BTFH-VZ#
Revision: 2A

Unless otherwise specified:
• Dimensions are in Millimeters
• Third Angle Projection

Drawn By: K. Lewis
Drawn Date: 07/15/2024
Approved By: K. Lewis
Approved Date: 07/15/2024

This drawing is solely the property of Newhaven Display International, Inc. The information it contains is not to be disclosed, reproduced or copied in whole or part without written approval from Newhaven Display.

Pin Description

Pin No.	Symbol	External Connection	Function Description
1	V_{SS}	Power Supply	Ground
2	V_{DD}	Power Supply	Supply Voltage for Logic (+5.0V)
3	V_0	Adj. Power Supply	Supply Voltage for Contrast (approx. -14.5V)
4	C/D	MPU	Command/Data selection: '1' = Command, '0' = Data
5	/RD	MPU	Active LOW Read signal
6	/WR	MPU	Active LOW Write signal
7-14	DB0-DB7	MPU	8-bit bi-directional data bus
15	/CE	MPU	Active LOW Chip Enable signal
16	/RESET	MPU	Active LOW Reset signal
17	VEE	Power Supply	Negative Voltage output (-16V)
18	MD2	MPU	Display size signal: '1' = 32 columns, '0' = 40 columns
19	FS1	MPU	Font Selection: '1' = 6x8, '0' = 8x8
20	NC	-	No Connect
A	LED+	Power Supply	Backlight Anode (60mA @ 3.5V)
K	LED-	Power Supply	Backlight Cathode (Ground)

Recommended LCD connector: 2.54mm pitch pins
Backlight connector: XH-3P **Mates with:** -

Wiring Diagram

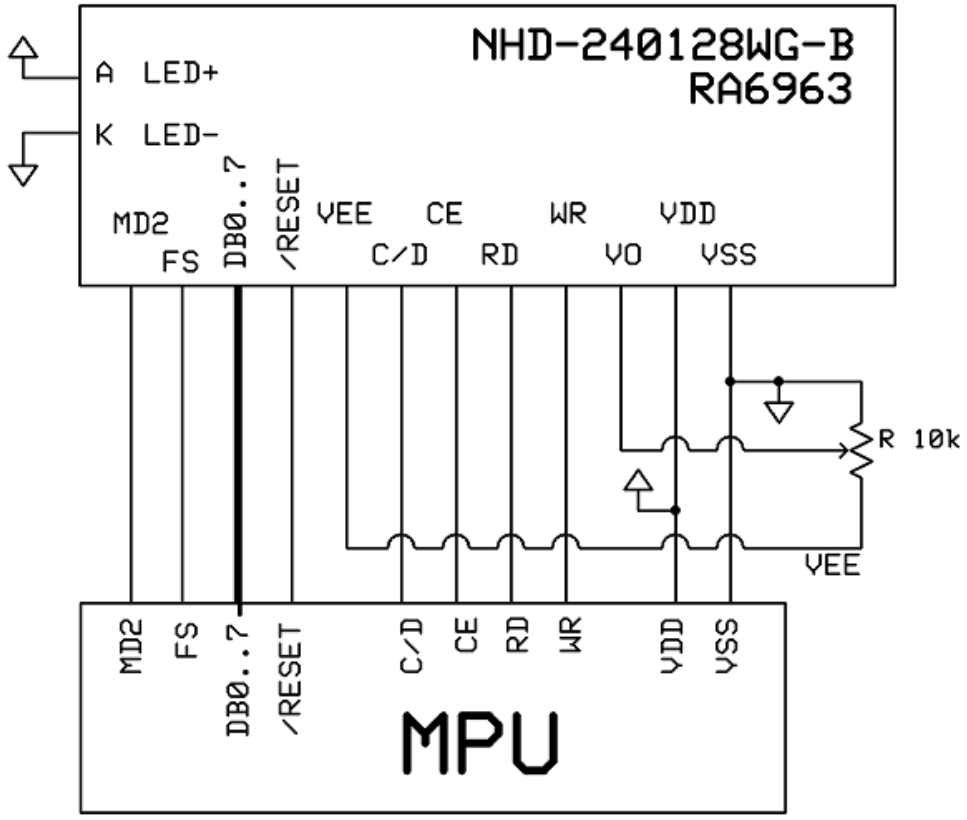

Electrical Characteristics

Item	Symbol	Condition	Min.	Typ.	Max.	Unit
Operating Temperature Range	T_{OP}	Absolute Max	-20	-	+70	°C
Storage Temperature Range	T_{ST}	Absolute Max	-30	-	+80	°C
Supply Voltage	V_{DD}	-	4.5	5.0	5.5	V
Supply Current	I_{DD}	V_{DD} = 5.0V T_{OP} = 25°C	13	26	52	mA
Supply for LCD (Contrast)	$V_{DD} – V_0$		18.9	19.5	20.1	V
"H" Level input	V_{IH}	-	0.8*V_{DD}	-	V_{DD}	V
"L" Level input	V_{IL}	-	V_{SS}	-	0.15*V_{DD}	V
"H" Level output	V_{OH}	-	V_{DD}-0.3	-	V_{DD}	V
"L" Level output	V_{OL}	-	V_{SS}	-	0.3	V
Backlight Supply Voltage	V_{LED}	I_{LED} =60mA	3.3	3.5	3.7	V
Backlight Supply Current	I_{LED}	-	45	60	85	mA
Backlight Lifetime	-	I_{LED} =60mA T_{OP} = 25°C	-	50,000	-	Hrs.

*The LED of the backlight is driven by current drain; drive voltage is for reference only. Drive voltage must be selected to ensure backlight current drain is below MAX level stated.

Optical Characteristics

Item		Symbol	Condition	Min.	Typ.	Max.	Unit
Optimal Viewing Angles	Top	φY+	CR ≥ 2	0	-	30	°
	Bottom	φY-		0	-	60	°
	Left	θX-		0	-	45	°
	Right	θX+		0	-	45	°
Contrast Ratio		CR	-	2	5	-	-
Response Time	Rise	T_R	T_{OP} = 25°C	-	200	300	ms
	Fall	T_F		-	250	350	ms

Controller Information

Built-in RA6963N1 Controller: https://support.newhavendisplay.com/hc/en-us/articles/4414786723479-RA6963

Table of Commands

Command	Code	D1	D2	Function
Registers Setting	00100001	X address	Y address	Set cursor pointer
	00100010	Data	00h	Set Offset Register
	00100100	Low address	High address	Set Address pointer
Set Control Word	01000000	Low address	High address	Set Text Home Address
	01000001	Columns	00h	Set Text Area
	01000010	Low address	High address	Set Graphic Home Address
	01000011	Columns	00h	Set Graphic Area
Mode Set	1000X000	--	--	OR mode
	1000X001	--	--	EXOR mode
	1000X011	--	--	AND mode
	1000X100	--	--	Text Attribute mode
	10000XXX	--	--	Internal CG ROM mode
	10001XXX	--	--	External CG RAM mode
Display Mode	10010000	--	--	Display off
	1001XX10	--	--	Cursor on, blink off
	1001XX11	--	--	Cursor on, blink on
	100101XX	--	--	Text on, graphic off
	100110XX	--	--	Text off, graphic on
	100111XX	--	--	Text on, graphic on
Cursor Pattern Select	10100000	--	--	1-line cursor
	10100001	--	--	2-line cursor
	10100010	--	--	3-line cursor
	10100011	--	--	4-line cursor
	10100100	--	--	5-line cursor
	10100101	--	--	6-line cursor
	10100110	--	--	7-line cursor
	10100111	--	--	8-line cursor
Data auto Read/Write	10110000	--	--	Set Data Auto Write
	10110001	--	--	Set Data Auto Read
	10110010	--	--	Auto Reset
Data Read/Write	11000000	Data	--	Data Write and Increment ADP
	11000001	--	--	Data Read and Increment ADP
	11000010	Data	--	Data Write and Decrement ADP
	11000011	--	--	Data Read and Decrement ADP
	11000100	Data	--	Data Write and Non-variable ADP
	11000101	--	--	Data Read and Non-variable ADP
Screen Peek	11100000	--	--	Screen Peek
Screen Copy	11101000			Screen Copy
Bit Set/Reset	11110XXX	--	--	Bit Reset
	11111XXX	--	--	Bit Set
	1111X000	--	--	Bit 0 (LSB)
	1111X001	--	--	Bit 1
	1111X010	--	--	Bit 2
	1111X011	--	--	Bit 3
	1111X100	--	--	Bit 4
	1111X101	--	--	Bit 5
	1111X110	--	--	Bit 6
	1111X111	--	--	Bit 7 (MSB)

Built-in Font Table

LSB / MSB	0	1	2	3	4	5	6	7	8	9	A	B	C	D	E	F
0		!	"	#	$	%	&	'	(	)	*	+	,	-	.	/
1	0	1	2	3	4	5	6	7	8	9	:	;	<	=	>	?
2	@	A	B	C	D	E	F	G	H	I	J	K	L	M	N	O
3	P	Q	R	S	T	U	V	W	X	Y	Z	[	\	]	^	_
4	`	a	b	c	d	e	f	g	h	i	j	k	l	m	n	o
5	p	q	r	s	t	u	v	w	x	y	z	{	|	}	~	
6	Ç	ü	é	â	ä	à	å	ç	ê	ë	è	ï	î	ì	Ä	Å
7	É	æ	Æ	ô	ö	ò	û	ù	ÿ	Ö	Ü	¢	£	¥	₧	ƒ

Timing Characteristics

8080 Parallel

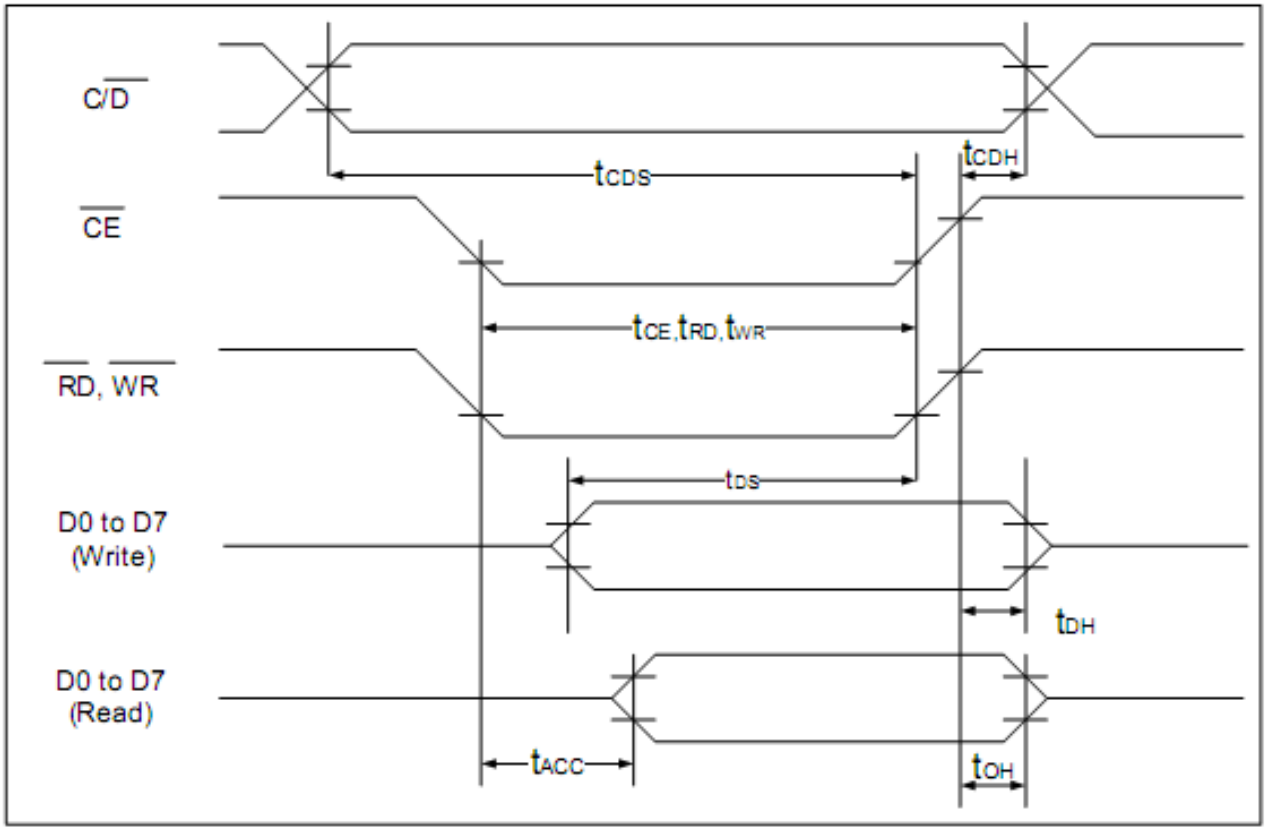

Item	Symbol	Test Conditions	Min.	Max.	Unit
C/$\overline{D}$ Set Up Time	t_{CDS}	--	100	--	ns
C/$\overline{D}$ Hold Time	t_{CDH}	--	10	--	ns
$\overline{CE}$, $\overline{RD}$, $\overline{WR}$ Pulse Width	t_{CE}, t_{RD}, t_{WR}	--	80	--	ns
Data Set Up Time	t_{DS}	--	80	--	ns
Data Hold Time	t_{DH}	--	40	--	ns
Access Time	t_{ACC}	--	--	150	ns
Output Hold Time	t_{OH}	--	10	50	ns

Example Program Code

```
//-----------------------------------------------------------------------------
Sub Writecom
 P1 = A                          'move data to port 1
 Set P3.0                         'set I/D for instruction
 Reset P3.1                         'reset /CS
 Reset P3.4                         'reset /WR
 Set P3.1                         'set /CS
 Set P3.4                         'set /WR
End Sub

Sub Writedata
 P1 = A                          'move data to port 1
 Reset P3.0                         'reset I/D for instruction
 Reset P3.1
 Reset P3.4                         'toggle /CS and /WR
 Set P3.1
 Set P3.4
End Sub

//-----------------------------------------------------------------------------
Sub Init
 Set P3.6
 Set P3.7
 Reset P3.3                         'reset FS
 A = &H00
 Call Writedata
 Call Writedata                       'text address = 0000h
 A = &H40
 Call Writecom                        'text home address set
 A = &H00
 Call Writedata
 A = &H40                         'graphic home address = 4000h
 Call Writedata
 A = &H42
 Call Writecom                        'graphic home address set
 A = &H1E
 Call Writedata
 A = &H00                         'text area address = 001Eh
 Call Writedata
 A = &H41
 Call Writecom                        'text area control set
 A = &H1E
 Call Writedata
 A = &H00                         'graphic area = 001Eh
 Call Writedata
 A = &H43
 Call Writecom                        'graphic area control set
 A = &H80
 Call Writecom                        'set display mode
End Sub
```

Quality Information

Test Item	Content of Test	Test Condition	Note
High Temperature storage	Endurance test applying the high storage temperature for a long time.	+80°C, 200hrs	2
Low Temperature storage	Endurance test applying the low storage temperature for a long time.	-30°C, 200hrs	1,2
High Temperature Operation	Endurance test applying the electric stress (voltage & current) and the high thermal stress for a long time.	+70°C, 200hrs	2
Low Temperature Operation	Endurance test applying the electric stress (voltage & current) and the low thermal stress for a long time.	-20°C, 200hrs	1,2
High Temperature / Humidity Operation	Endurance test applying the electric stress (voltage & current) and the high thermal with high humidity stress for a long time.	+60°C, 90% RH, 96hrs	1,2
Thermal Shock resistance	Endurance test applying the electric stress (voltage & current) during a cycle of low and high thermal stress.	-20°C, 30min -> 25°C, 5min -> 70°C, 30min = 1 cycle 10 cycles	
Vibration test	Endurance test applying vibration to simulate transportation and use.	10-55Hz, 1.5mm amplitude. 60 sec in each of 3 directions X,Y,Z For 15 minutes	3
Static electricity test	Endurance test applying electric static discharge.	Air: ±800V 150pF/330Ω, 10 Times	
		Contact: ±600V 150pF/330Ω, 10 Times	

Note 1: No condensation to be observed.
Note 2: Conducted after 4 hours of storage at 25°C, 0%RH.
Note 3: Test performed on product itself, not inside a container.